Slant/Fin

Revital/Line®
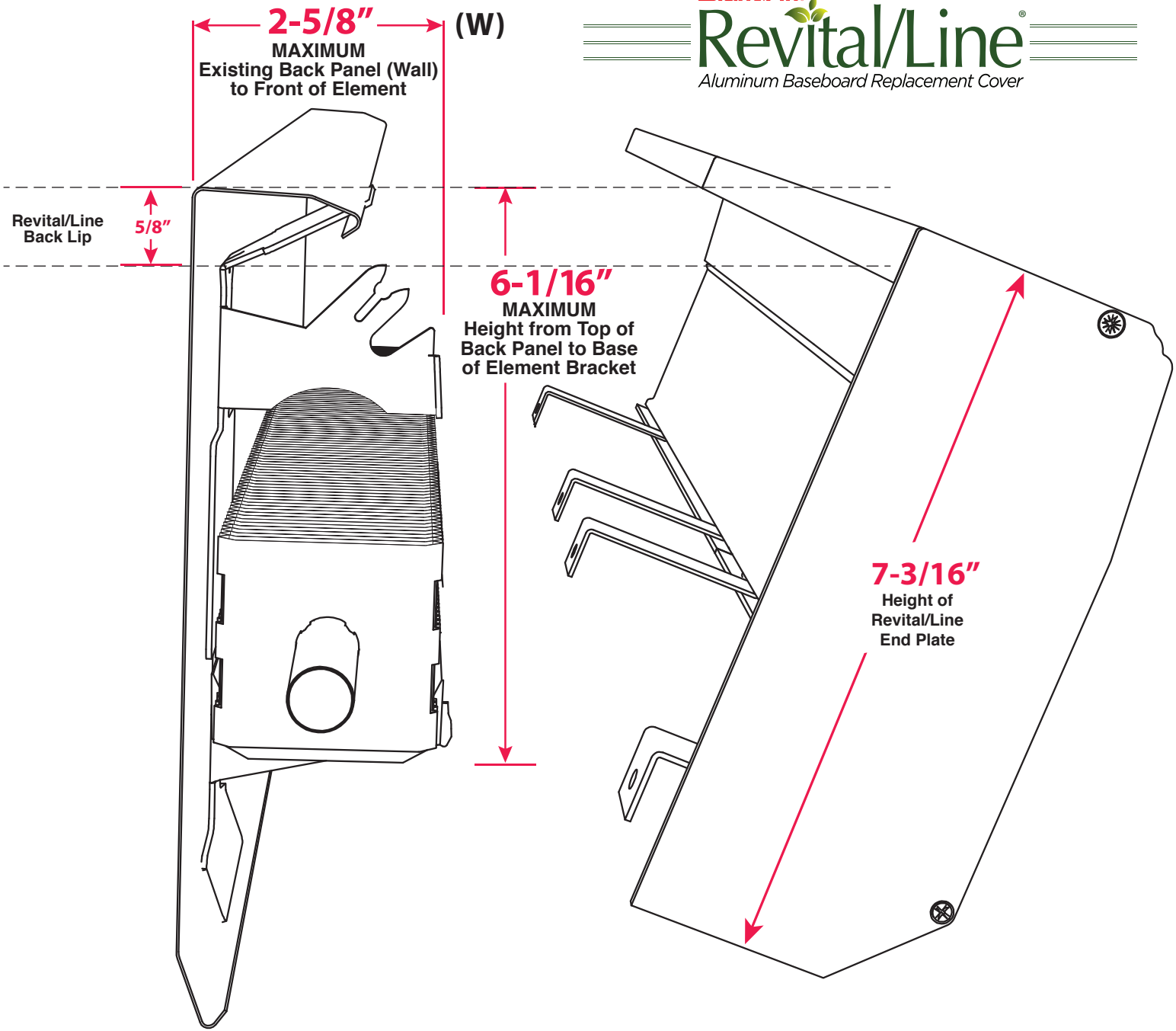
Aluminum Baseboard Replacement Cover