Slant/Fin

Revital/Line XL
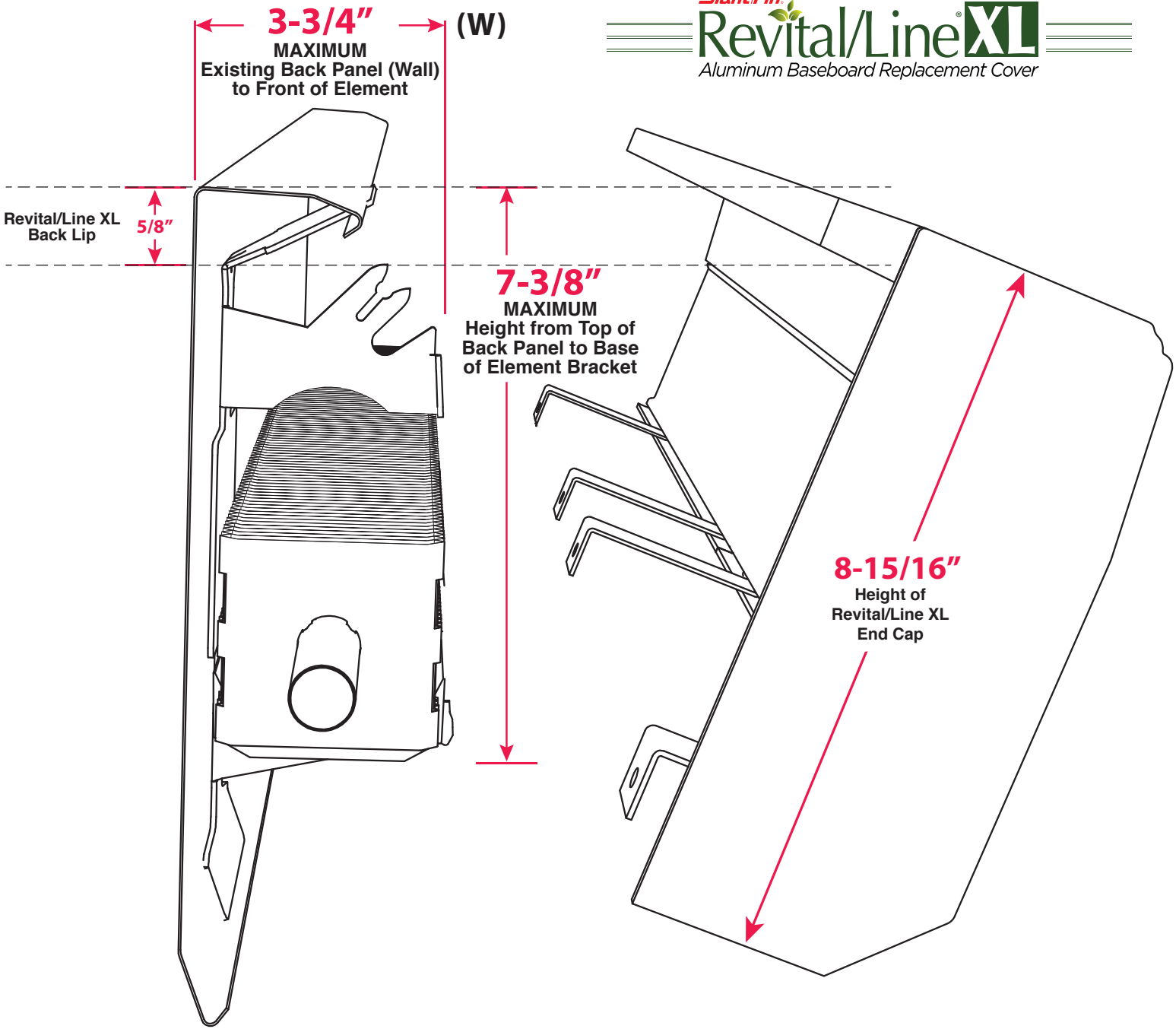
Aluminum Baseboard Replacement Cover